Jewel Collection
General Specifications

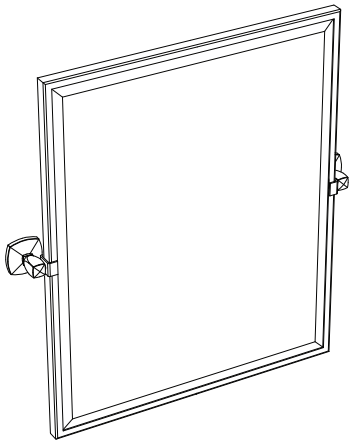

Pivoting Framed
Rectangle Mirror
(Beveled)

#4149FSM (Chrome)
#4159FSM (Satin Nickel)

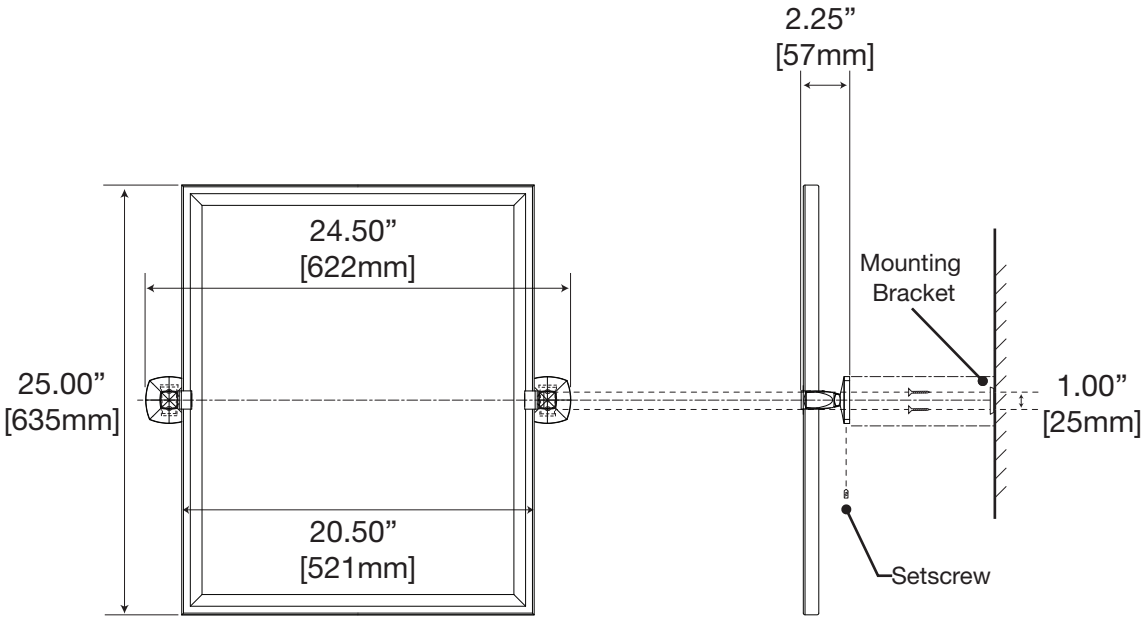

The manufacturer reserves the right to, and do time to time, make changes and improvements in designs and dimensions.
Updated on February 1, 2017